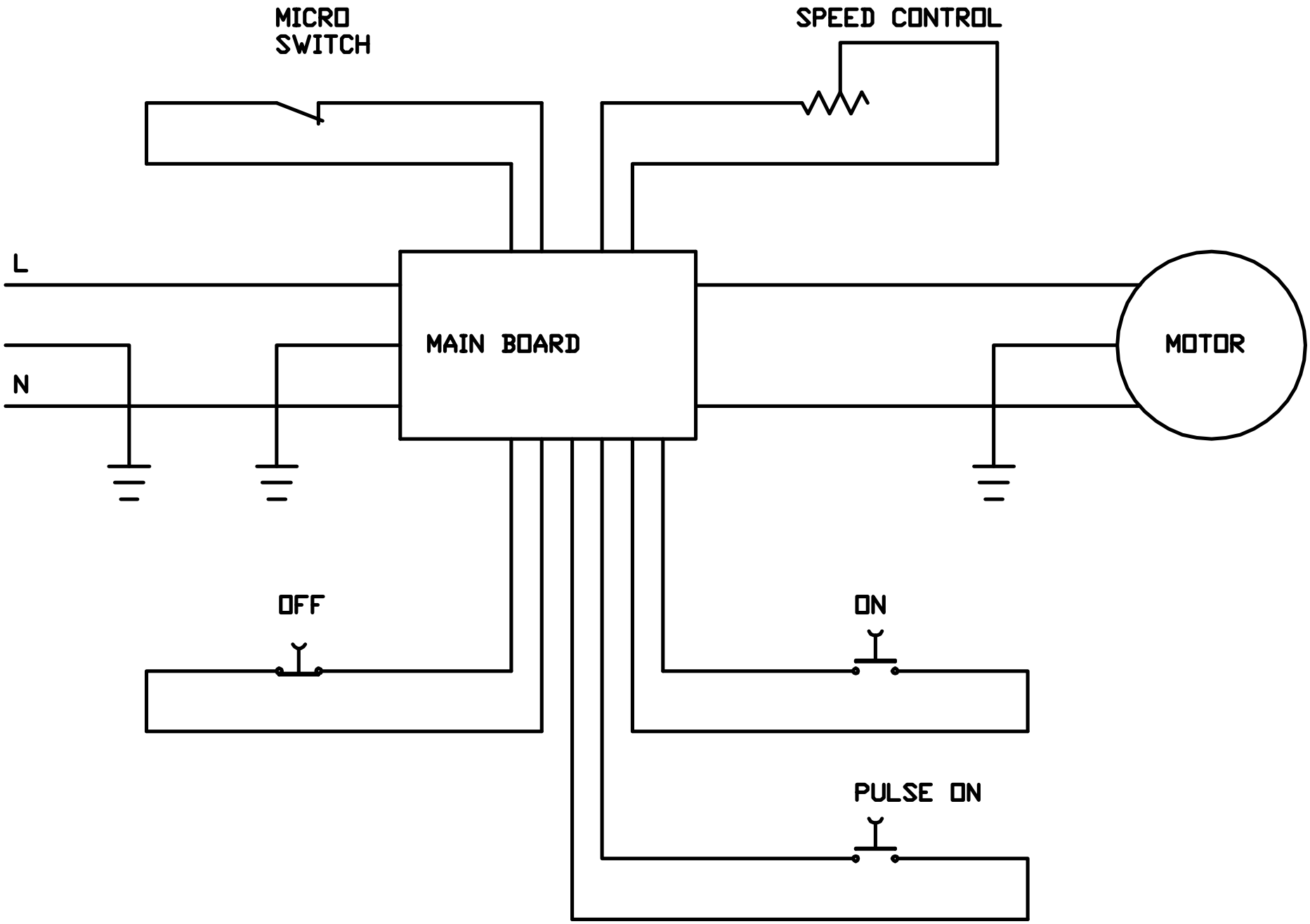
MICRO
SWITCH
SPEED CONTROL
L
N
MAIN BOARD
MOTOR
OFF
ON
PULSE ON